ROOF REPLACEMENT
CORNELL UNIVERSITY GOLDWIN SMITH HALL
ITHACA, NEW YORK
SCHEMATIC DESIGN DRAFT
23 JANUARY 2013

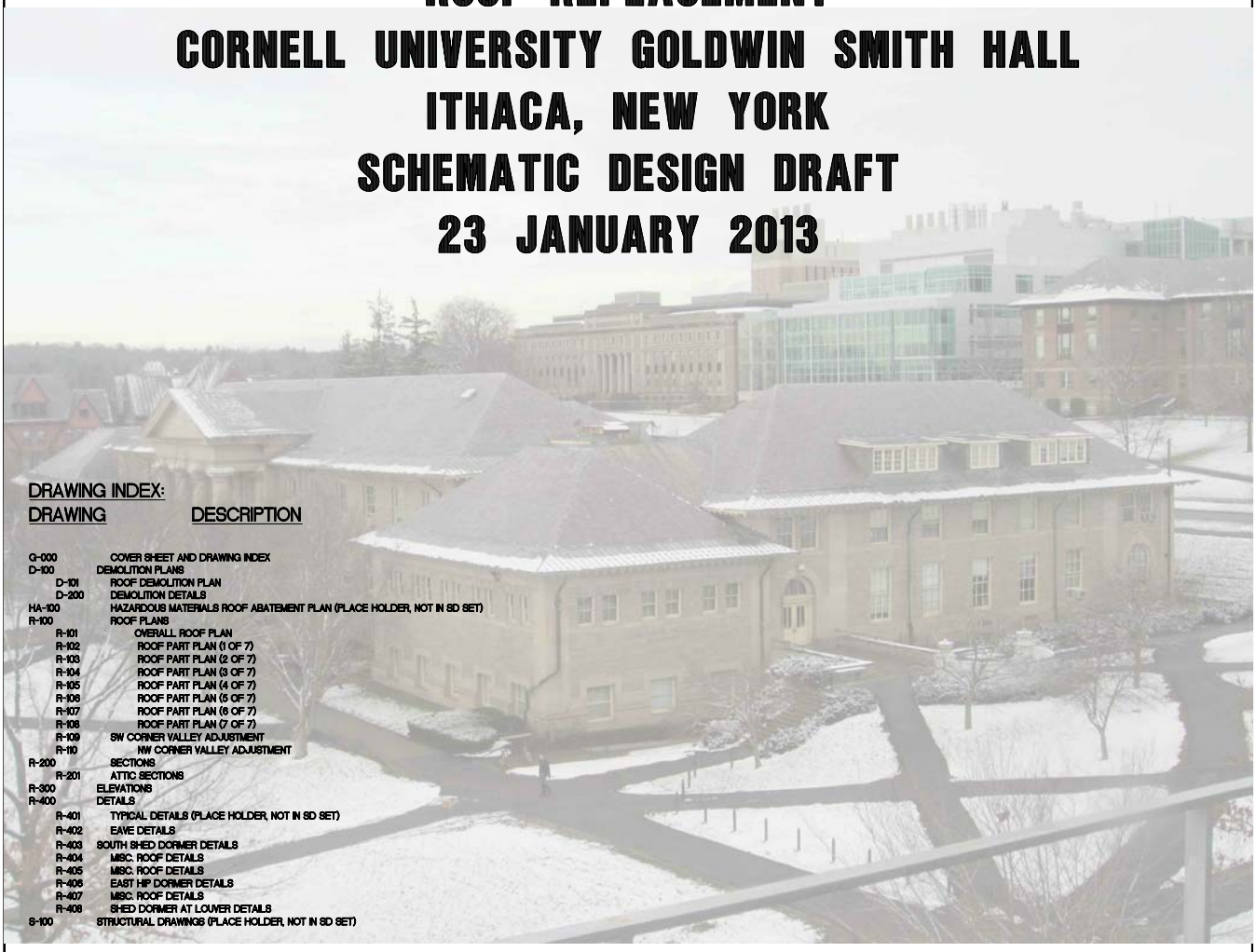

DRAWING INDEX:

DRAWING	DESCRIPTION
G-000	COVER SHEET AND DRAWING INDEX
D-100	DEMOLITION PLANS
D-101	ROOF DEMOLITION PLAN
D-200	DEMOLITION DETAILS
HA-100	HAZARDOUS MATERIALS ROOF ABATEMENT PLAN (PLACE HOLDER, NOT IN SD SET)
R-100	ROOF PLANS
R-101	OVERALL ROOF PLAN
R-102	ROOF PART PLAN (1 OF 7)
R-103	ROOF PART PLAN (2 OF 7)
R-104	ROOF PART PLAN (3 OF 7)
R-105	ROOF PART PLAN (4 OF 7)
R-106	ROOF PART PLAN (5 OF 7)
R-107	ROOF PART PLAN (6 OF 7)
R-108	ROOF PART PLAN (7 OF 7)
R-109	SW CORNER VALLEY ADJUSTMENT
R-110	NW CORNER VALLEY ADJUSTMENT
R-200	SECTIONS
R-201	ATTIC SECTIONS
R-300	ELEVATIONS
R-400	DETAILS
R-401	TYPICAL DETAILS (PLACE HOLDER, NOT IN SD SET)
R-402	EAVE DETAILS
R-403	SOUTH SHED DORMER DETAILS
R-404	MISC. ROOF DETAILS
R-405	MISC. ROOF DETAILS
R-406	EAST HIP DORMER DETAILS
R-407	MISC. ROOF DETAILS
R-408	SHED DORMER AT LOUVER DETAILS
S-100	STRUCTURAL DRAWINGS (PLACE HOLDER, NOT IN SD SET)

Project

GOLDWIN SMITH HALL ROOF REPLACEMENT

CORNELL UNIVERSITY
333 EAST AVENUE
ITHACA, NY

Architect

KOETTER | KIM & ASSOCIATES | INC.

ARCHITECTURE URBAN DESIGN

350 Boylston Street, Boston, MA 02116
T 617 536 3585 F 617 536 1217
E koetterkim.com

Consultants

Roof Covering and Roof Structure
Simpson Gumpertz & Heger Associates, Inc./P.C.
41 Seyon Street
Building 1, Suite 500
Waltham, MA 02451
T (781) 907-9000
F (781) 907-9009

Code Consultant
Higbee Fire Protection
5 Mount Royal Avenue
Suite 240
Marlborough, MA 01752
T (508) 624-7766
F (508) 624-7716

Historic Preservation Specialist
EHT Traceries Inc.
1121 Fifth Street NW
Washington, DC 20001
T (202) 393-1199
F (202) 393-1606

Environmental Consultant
Watts Architecture & Engineering
95 Perry Street Suite
300 Buffalo, NY 14203
T (716) 204-5100
F (716) 472-4763

SCHEMATIC DESIGN DRAFT
NOT FOR CONSTRUCTION

Issue

CORNELL PDC PROJECT NUMBER C08070
SCHEMATIC DESIGN

Revisions

These Drawings are 30"x42" @ 1/8"=1'0"

Drawing Title

COVER SHEET AND DRAWING INDEX

KKA Project Number 0710.000	Approved
SGH Project Number 121668.02	
Drawn By **FPB**	
Checked By **PSM**	
Date JANUARY 2013	
Issue	

Drawing Number

G-000

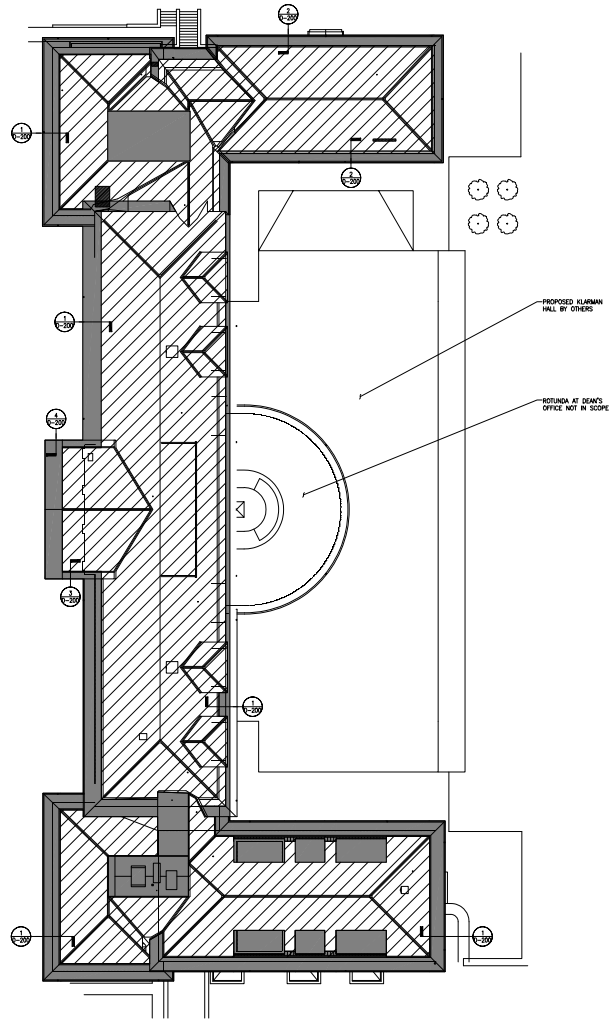

LEGEND:

REMOVE AND DISPOSE OF EXISTING METAL ROOFING SYSTEM

REMOVE AND DISPOSE OF EXISTING SLATE ROOFING SYSTEM

1 D-101 ROOF DEMOLITION PLAN

1/16"=1'-0"

Project

GOLDWIN SMITH HALL ROOF REPLACEMENT

CORNELL UNIVERSITY
232 EAST AVENUE
ITHACA, NY

Architect

KOETTER | KIM & ASSOCIATES | INC.
ARCHITECTURE URBAN DESIGN
356 Boylston Street, Boston, MA 02116
T 617 536 8560 F 617 536 1217
W koetterkim.com

Consultants

Roof Covering and Roof Structure:
Simpson Gumpertz & Heger Associates, Inc. P.C.
41 Seyon Street
Building 1, Suite 500
Waltham, MA 02451
T (781) 907-6000
F (781) 907-6009

Code Consultant:
Highest Fire Protection
5 Mount Royal Avenue
Suite 240
Marlborough, MA 01752
T (508) 624-7786
F (508) 624-7716

Hotel Promotion Specialist:
EHT Traceries Inc.
1121 Fifth Street NW
Washington, DC 20001
T (202) 393-1199
F (202) 393-1056

Environmental Consultant:
Watts Architecture & Engineering
95 Perry Street Suite
300 Buffalo, NY 14203
T (716) 206-5120
F (716) 472-4763

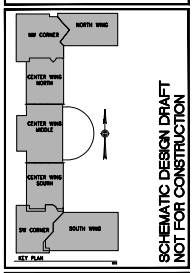

SCHEMATIC DESIGN DRAFT
NOT FOR CONSTRUCTION

Issue

CORNELL PDC PROJECT NUMBER C08070
SCHEMATIC DESIGN

Revisions

These Drawings are 30"x42" @ 1/8"=1'-0"

Drawing Title

ROOF DEMOLITION PLAN

KKA Project Number 0710.000	Approval
SGH Project Number 121068.02	
Drawn By FFB	
Checked By PSM	
Date JANUARY 2013	
Issue	

Drawing Number

D-101

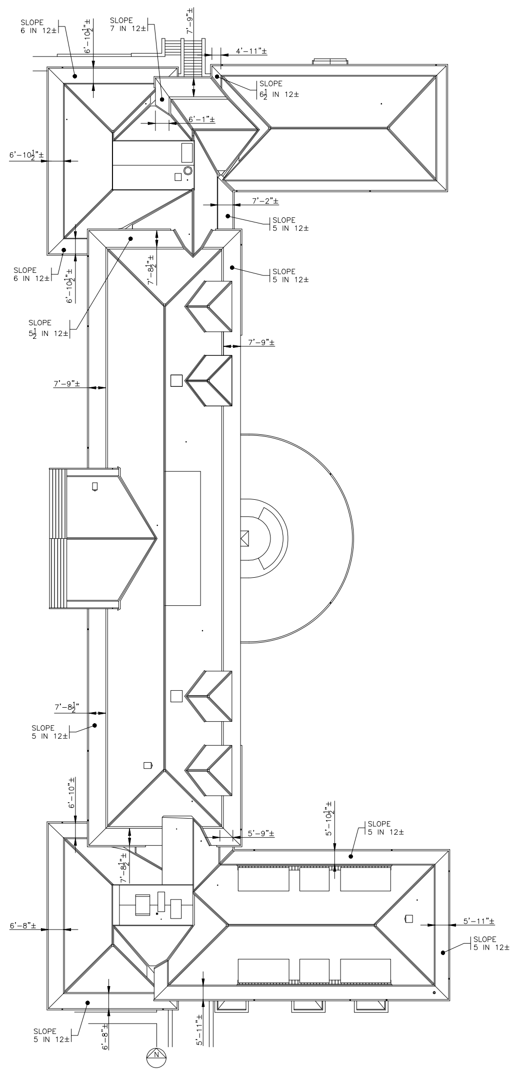

ROOF KEY PLAN

1/16"=1'-0"

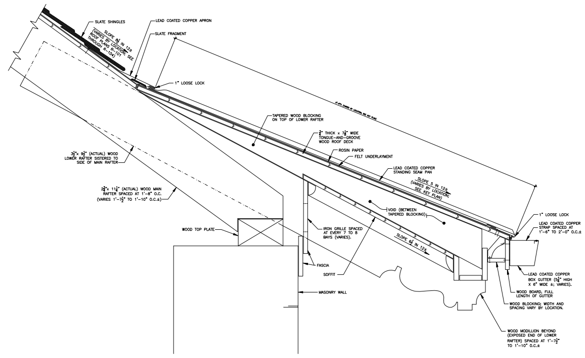

1 D-200 DETAIL: EXISTING EAVE AT MAIN BUILDING (TYP.)

1 1/2"=1'-0"

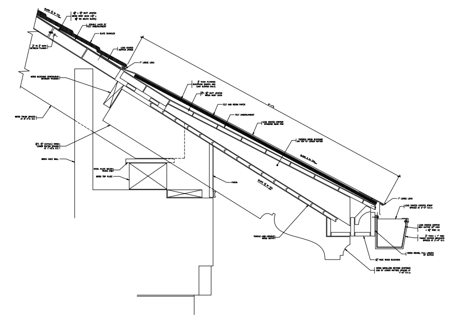

2 D-200 DETAIL: EXISTING EAVE AT ORIGINAL DAIRY SCIENCE BUILDING (EAST END OF NORTH WING) (TYP.)

1 1/2"=1'-0"

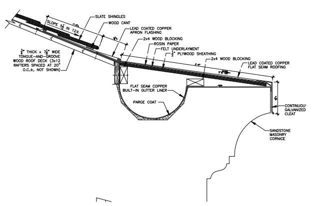

3 D-200 DETAIL: EXISTING EAVE AT MAIN ENTRANCE PEDIMENT

1 1/2"=1'-0"

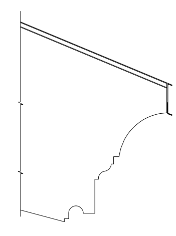

4 R-402 EAVE AT PORTICO GABLE END BUMP-UP

SECTION

1 1/2"=1'-0"

Project

GOLDWIN SMITH HALL ROOF REPLACEMENT

CORNELL UNIVERSITY
232 EAST AVENUE
ITHACA, NY

Architect:
KOETTER | KIM & ASSOCIATES | INC.
ARCHITECTURE URBAN DESIGN
356 Boylston Street, Boston, MA 02116
T 617 536 8560 F 617 536 1217
W koetterkim.com

Consultants

Roof Covering and Roof Structure:
Simpson Gumpertz & Heger Associates, Inc. P.C.
41 Seyon Street
Building 1, Suite 500
Waltham, MA 02451
T (781) 907-9000
F (781) 907-9009

Code Consultant:
Hughes Fire Protection
5 Mount Royal Avenue
Suite 240
Marlborough, MA 01752
T (508) 624-7766
F (508) 624-7718

Historic Preservation Specialist:
EHT Traceries Inc.
1121 Fifth Street NW
Washington, DC 2001
T (202) 393-1199
F (202) 393-1056

Environmental Consultant:
Watts Architecture & Engineering
95 Perry Street Suite
300 Buffalo, NY 14203
T (716) 206-5100
F (716) 472-4793

SCHEMATIC DESIGN DRAFT
NOT FOR CONSTRUCTION

Issue
CORNELL PDC PROJECT NUMBER C08070
SCHEMATIC DESIGN

Revisions

These Drawings are 30"x42" @ full size

Drawing Title

EXISTING EAVE DETAILS

KKA Project Number 0710.000	Approval
SGH Project Number 121068.02	
Drawn By FFB	
Checked By PSM	
Date JANUARY 2013	
Issue	

Drawing Number

D-200

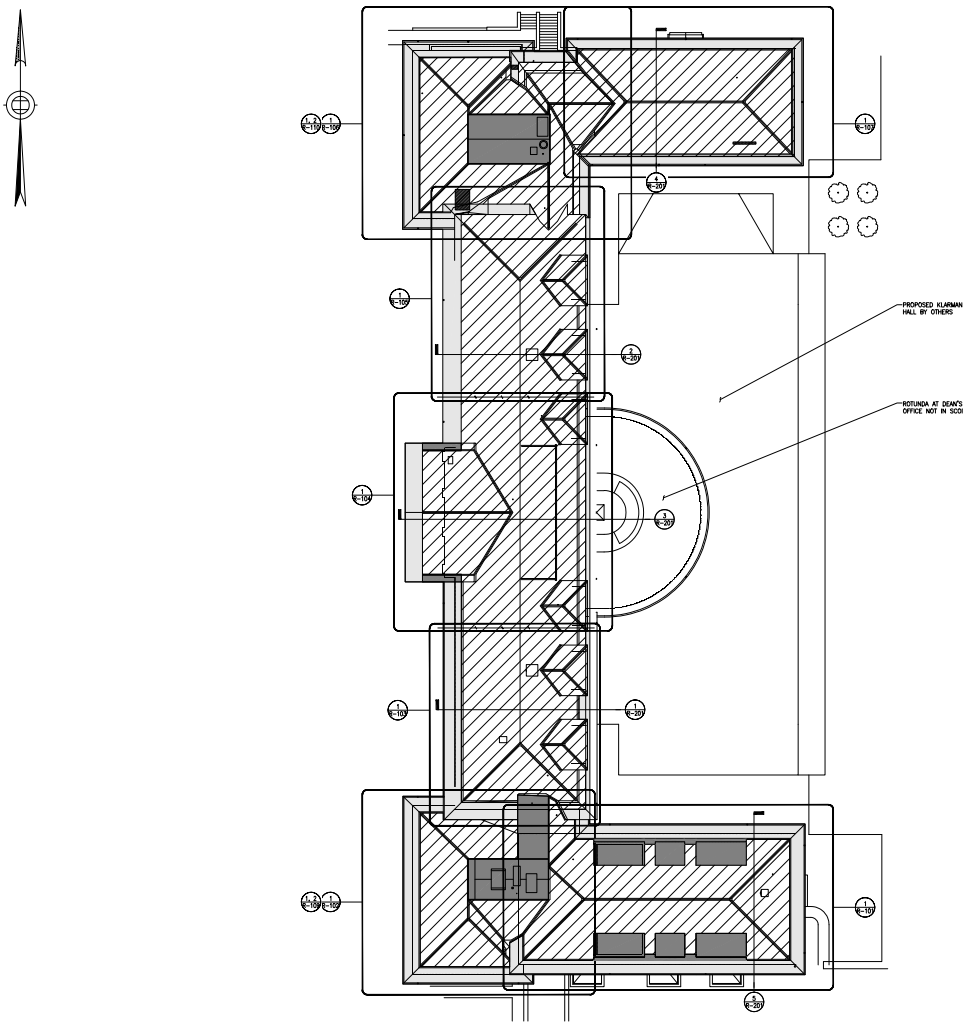

OVERALL ROOF PLAN

1/16"=1'-0"

LEGEND:

- NEW STANDING SEAM METAL ROOFING SYSTEM
- NEW SLATE ROOFING SYSTEM
- NEW FLAT SEAM SOLDERED ROOFING SYSTEM

NOTES:

1. SEE PARTIAL PLANS FOR DETAILED SCOPE OF WORK.

Project

GOLDWIN SMITH HALL ROOF REPLACEMENT

CORNELL UNIVERSITY
232 EAST AVENUE
ITHACA, NY

Architect

KOETTER | KIM & ASSOCIATES | INC.
ARCHITECTURE URBAN DESIGN
356 Boylston Street, Boston, MA 02116
T 617 536 8560 F 617 536 1217
W koetterkim.com

Consultants

Roof Covering and Roof Structure:
Simpson Gumpertz & Heger Associates, Inc. P.C.
41 Seyon Street
Building 1, Suite 500
Waltham, MA 02451
T (781) 907-6000
F (781) 907-6009

Code Consultant:
Highest Fire Protection
5 Mount Royal Avenue
Suite 240
Marlborough, MA 01752
T (508) 624-7786
F (508) 624-7716

Hazmat Promotion Specialist:
EHT Traceless Inc.
1121 Fifth Street NW
Washington, DC 20001
T (202) 393-1199
F (202) 393-1036

Environmental Consultant:
Watts Architecture & Engineering
95 Perry Street Suite
300 Buffalo, NY 14203
T (716) 206-5120
F (716) 472-4763

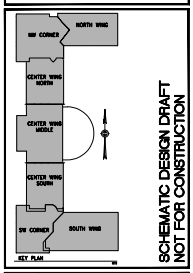

SCHEMATIC DESIGN DRAFT
NOT FOR CONSTRUCTION

Issue

CORNELL PDC PROJECT NUMBER C08070
SCHEMATIC DESIGN

Revisions

These Drawings are 30"x42" @ Millsize

Drawing Title

OVERALL ROOF PLAN

KKA Project Number 0710.000	Approval
SGH Project Number 121068.02	
Drawn By **FFB**	
Checked By **PSM**	
Date JANUARY 2013	
Issue	

Drawing Number

R-101

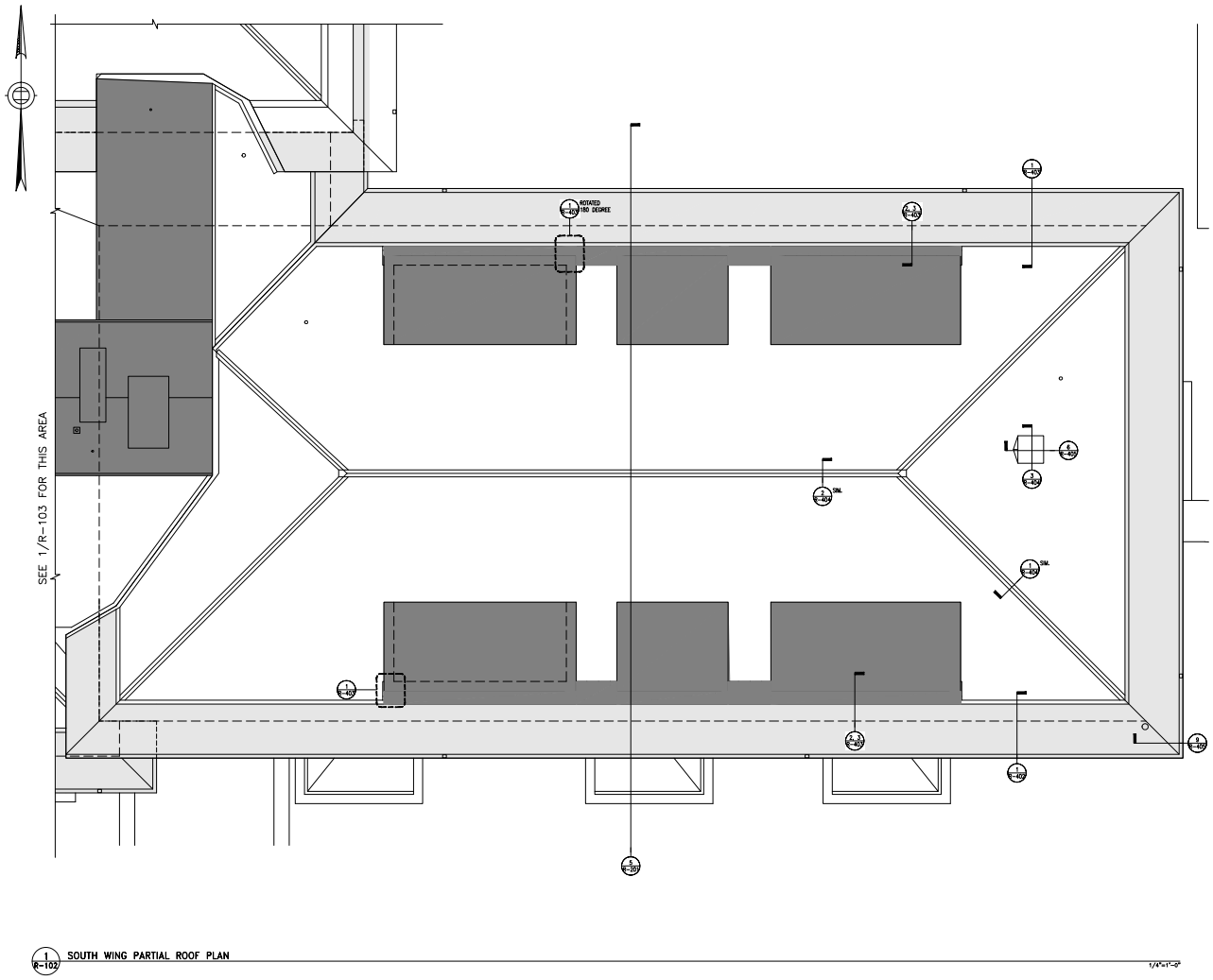

1 R-102 SOUTH WING PARTIAL ROOF PLAN 1/4"=1'-0"

Project

GOLDWIN SMITH HALL
ROOF REPLACEMENT

CORNELL UNIVERSITY
ITHACA, NY

Architect
KOETTER | KIM & ASSOCIATES | INC.
ARCHITECTURE URBAN DESIGN
350 Boylston Street, Boston, MA 02116
T 617 536 3585 F 617 536 1217
koetterkim.com

Consultants

Roof Covering and Roof Structure
Simpson Gumpertz & Heger Associates, Inc., P.C.
41 Seyon Street
Building 1, Suite 500
Waltham, MA 02451
T (781) 907-9000
F (781) 907-9009

Code Consultant
Higbee Fire Protection
5 Mount Royal Avenue
Suite 240
Marlborough, MA 01752
T (508) 624-7766
F (508) 624-7716

Historic Preservation Specialist
EHT Traceries Inc.
1121 Fifth Street NW
Washington, DC 2001
T (202) 393-1199
F (202) 393-1606

Environmental Consultant
Watts Architecture & Engineering
95 Perry Street Suite
300 Buffalo, NY 14203
T (716) 204-5100
F (716) 472-4763

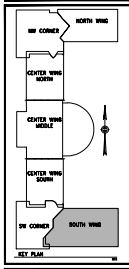

SCHEMATIC DESIGN DRAFT
NOT FOR CONSTRUCTION

Issue
CORNELL PDC PROJECT NUMBER C08870
SCHEMATIC DESIGN

Revisions

These Drawings are 30"x42" @ 1/8"size

Drawing Title

ROOF PART PLAN
(1 OF 7)

KKA Project Number 0710.000	Approval
SGH Project Number 121068.02	
Drawn By FTB	
Checked By PSM	
Date JANUARY 2013	
Issue	

Drawing Number

R-102

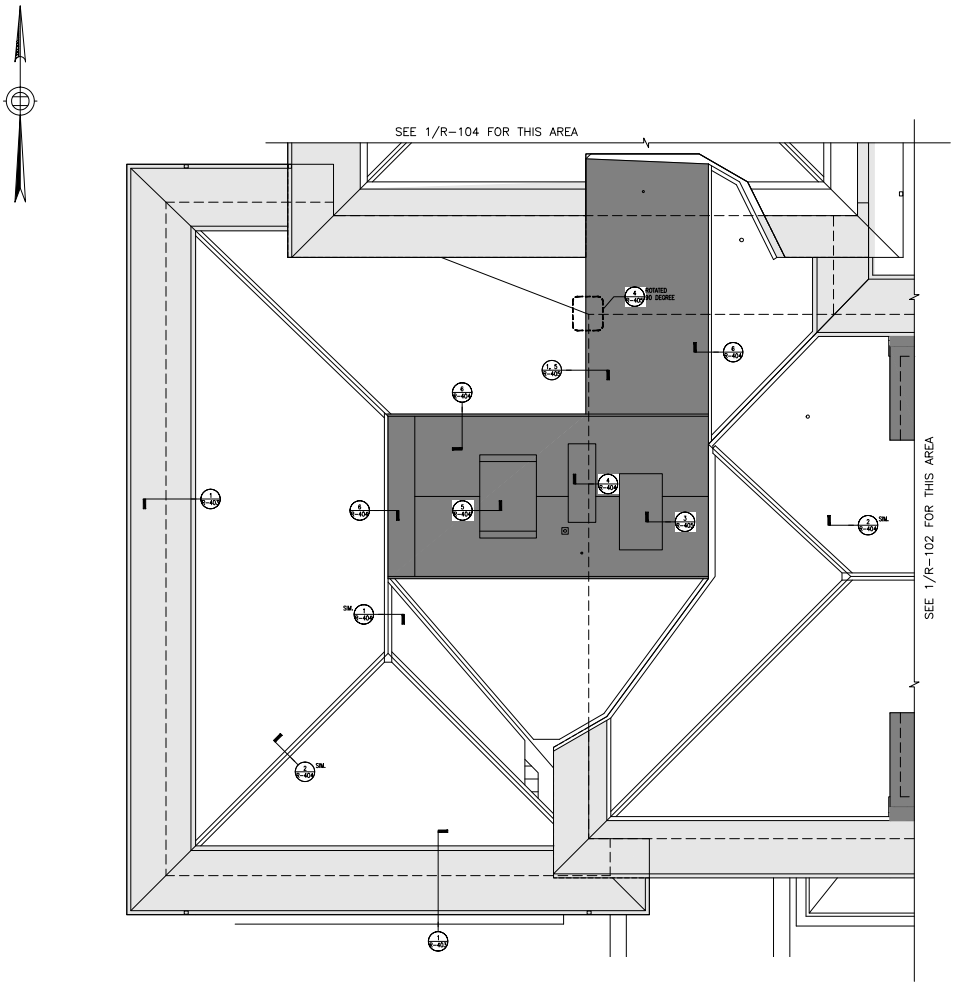

1 R-103 SW CORNER PARTIAL ROOF PLAN

1/4"=1'-0"

Project

GOLDWIN SMITH HALL ROOF REPLACEMENT

CORNELL UNIVERSITY
232 EAST AVENUE
ITHACA, NY

Architect

KOETTER | KIM & ASSOCIATES | INC.

ARCHITECTURE URBAN DESIGN

356 Boylston Street, Boston, MA 02116
T 617 536 8560 F 617 536 1217
W koetterkim.com

Consultants

Roof Covering and Roof Structure:
Simpson Gumpertz & Heger Associates, Inc., P.C.
41 Seyon Street
Building 1, Suite 500
Waltham, MA 02451
T (781) 907-6000
F (781) 907-6009

Crane Consultant:
Highest Fire Protection
5 Mount Royal Avenue
Suite 240
Marlborough, MA 01752
T (508) 624-7786
F (508) 624-7716

Hazmat Preservation Specialist:
EHT Traceline Inc.
1121 Fifth Street NW
Washington, DC 20001
T (202) 393-1199
F (202) 393-1056

Environmental Consultant:
Watts Architecture & Engineering
95 Perry Street Suite
300 Buffalo, NY 14203
T (716) 206-5120
F (716) 472-4763

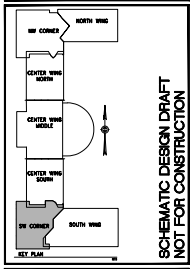

SCHEMATIC DESIGN DRAFT
NOT FOR CONSTRUCTION

Issue

CORNELL PDC PROJECT NUMBER C08070
SCHEMATIC DESIGN

Revisions

These Drawings are 37"x42" @ Millsize

Drawing Title

ROOF PART PLAN (2 OF 7)

KKA Project Number 0710.000	Approval
SGH Project Number 121068.02	
Drawn By FFB	
Checked By PSM	
Date JANUARY 2013	
Issue	

Drawing Number

R-103

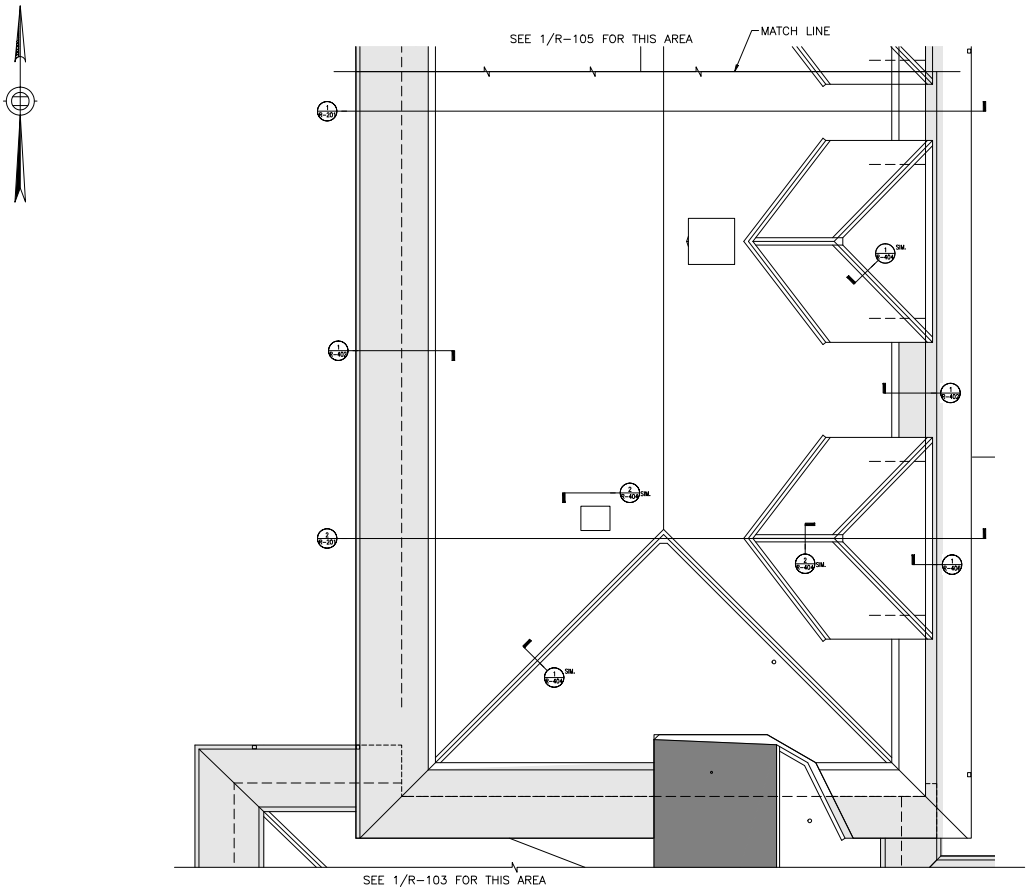

1 R-104 CENTER WING SOUTH PARTIAL ROOF PLAN

1/4"=1'-0"

Project

GOLDWIN SMITH HALL ROOF REPLACEMENT

CORNELL UNIVERSITY
232 EAST AVENUE
ITHACA, NY

Architect
KOETTER | KIM & ASSOCIATES | INC.
ARCHITECTURE URBAN DESIGN
356 Boylston Street, Boston, MA 02116
T 617 536 8560 F 617 536 1217
W koetterkim.com

Consultants

Roof Covering and Roof Structure:
Simpson Gumpertz & Heger Associates, Inc., P.C.
41 Boyce Street
Building 1, Suite 500
Waltham, MA 02451
T (781) 907-6000
F (781) 907-6009

Code Consultant:
Hagerty Fire Protection
5 Mount Royal Avenue
Suite 240
Marlborough, MA 01752
T (508) 624-7766
F (508) 624-7716

Hotel Promotion Specialist:
EHT Traverse Inc.
1121 Fifth Street NW
Washington, DC 20001
T (202) 393-1199
F (202) 393-1036

Environmental Consultant:
Watts Architecture & Engineering
95 Perry Street Suite
300 Buffalo, NY 14203
T (716) 206-5120
F (716) 472-4763

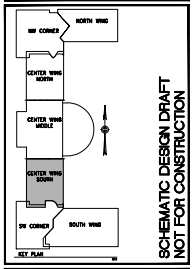

SCHEMATIC DESIGN DRAFT
NOT FOR CONSTRUCTION

Issue
CORNELL PDC PROJECT NUMBER C08070
SCHEMATIC DESIGN

Revisions

These Drawings are 37"x42" @ Millsize

Drawing Title

ROOF PART PLAN (3 OF 7)

KKA Project Number 0710.000	Approval
SGH Project Number 121068.02	
Drawn By FFB	
Checked By PSM	
Date JANUARY 2013	
Issue	

Drawing Number

R-104

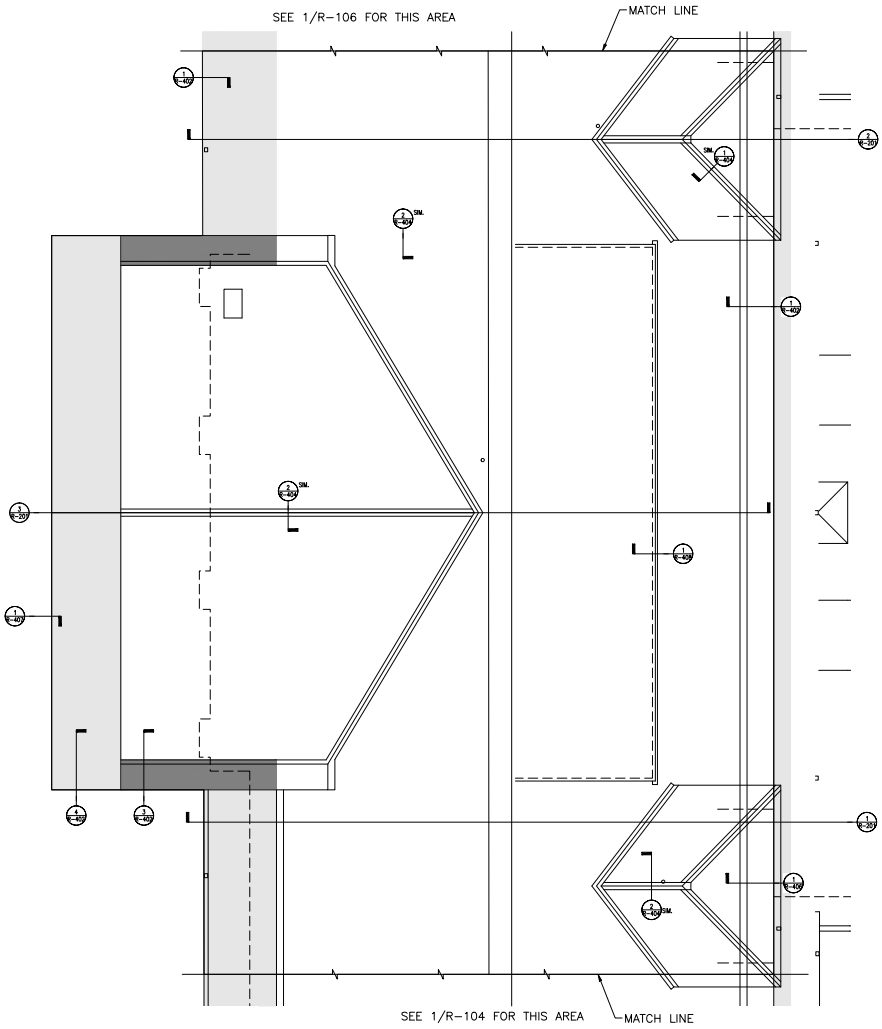

1 R-105 CENTER WING MIDDLE PARTIAL ROOF PLAN 1/4"=1'-0"

Project

GOLDWIN SMITH HALL
ROOF REPLACEMENT

CORNELL UNIVERSITY
330 EAST AVENUE
ITHACA, NY

Architect
KOETTER | KIM & ASSOCIATES | INC.
ARCHITECTURE URBAN DESIGN
356 Boylston Street, Boston, MA 02116
T 617 536 0585 F 617 536 1217
koetterkim.com

Consultants

Roof Covering and Roof Structure
Simpson Gumpertz & Heger Associates, Inc./P.C.
41 Seyon Street
Building 1, Suite 500
Waltham, MA 02451
T (781) 907-9000
F (781) 907-9009

Code Consultant
Higbee Fire Protection
5 Mount Royal Avenue
Suite 240
Marlborough, MA 01752
T (508) 624-7766
F (508) 624-7716

Historic Preservation Specialist
EHT Traceries Inc.
1121 Fifth Street NW
Washington, DC 2001
T (202) 393-1199
F (202) 393-1606

Environmental Consultant
Watts Architecture & Engineering
95 Perry Street Suite
300 Buffalo, NY 14203
T (716) 204-5100
F (716) 472-4763

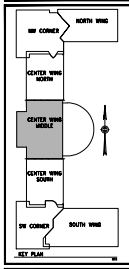

SCHEMATIC DESIGN DRAFT
NOT FOR CONSTRUCTION

Issue
CORNELL PDC PROJECT NUMBER C08070
SCHEMATIC DESIGN

Revisions

These Drawings are 30"x42" @ 1/4"=1'-0"

Drawing Title:

ROOF PART PLAN
(4 OF 7)

KKA Project Number
0710.000

SGH Project Number
121068.02

Drawn By
FTB

Checked By
PSM

Date
JANUARY 2013

Issue

Approval

Drawing Number

R-105

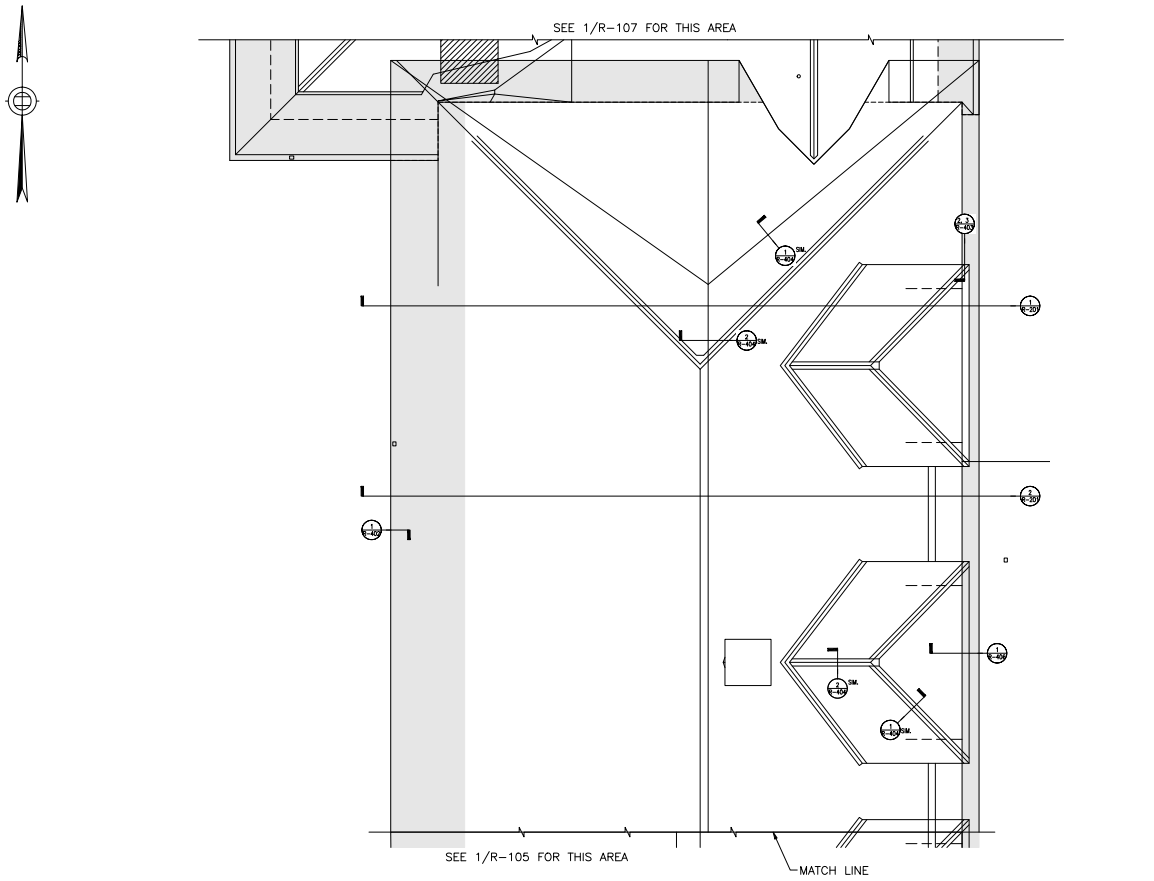

1 R-106 CENTER WING NORTH PARTIAL ROOF PLAN

1/4"=1'-0"

Project

GOLDWIN SMITH HALL ROOF REPLACEMENT

CORNELL UNIVERSITY
232 EAST AVENUE
ITHACA, NY

Architect

KOETTER | KIM & ASSOCIATES | INC.

ARCHITECTURE URBAN DESIGN

356 Boylston Street, Boston, MA 02116
T 617 536 8560 F 617 536 1217
W koetterkim.com

Consultants

Roof Covering and Roof Structure:
Simpson Gumpertz & Heger Associates, Inc., P.C.
41 Bayon Street
Building 1, Suite 500
Waltham, MA 02451
T (781) 907-6000
F (781) 907-6009

Code Consultant:
Highest Fire Protection
5 Mount Royal Avenue
Suite 240
Marlborough, MA 01752
T (508) 624-7786
F (508) 624-7718

Hotel Promotion Specialist:
EHT Traverse Inc.
1121 Fifth Street NW
Washington, DC 20001
T (202) 393-1199
F (202) 393-1056

Environmental Consultant:
Watts Architecture & Engineering
95 Perry Street Suite
300 Buffalo, NY 14203
T (716) 206-5120
F (716) 472-4763

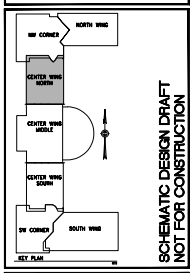

SCHEMATIC DESIGN DRAFT
NOT FOR CONSTRUCTION

Issue

CORNELL PDC PROJECT NUMBER C08070
SCHEMATIC DESIGN

Revisions

These Drawings are 37"x42" @ Millsize

Drawing Title

ROOF PART PLAN (5 OF 7)

KKA Project Number 0710.000	Approval
SGH Project Number 121068.02	
Drawn By FFB	
Checked By PSM	
Date JANUARY 2013	
Issue	

Drawing Number

R-106

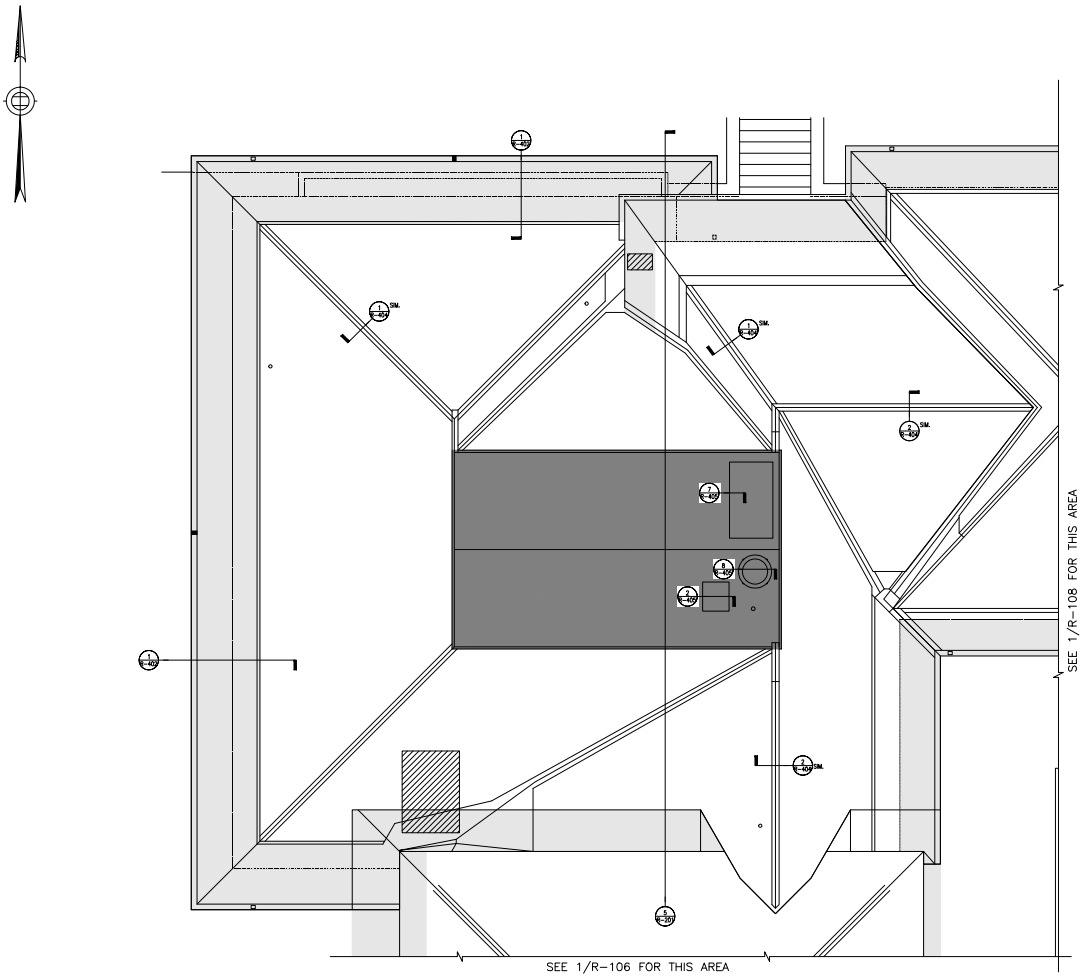

1 R-107 NW CORNER PARTIAL ROOF PLAN

1/4"=1'-0"

Project

GOLDWIN SMITH HALL ROOF REPLACEMENT

CORNELL UNIVERSITY
232 EAST AVENUE
ITHACA, NY

Architect

KOETTER | KIM & ASSOCIATES | INC.

ARCHITECTURE URBAN DESIGN

356 Boylston Street, Boston, MA 02116
T 617 536 8560 F 617 536 1217
W koetterkim.com

Consultants

Roof Covering and Roof Structure:
Simpson Gumpertz & Hager Associates, Inc., P.C.
41 Boyon Street
Building 1, Suite 500
Waltham, MA 02451
T (781) 907-6000
F (781) 907-6009

Crane Consultant:
Highest Fire Protection
5 Mount Royal Avenue
Suite 240
Marlborough, MA 01752
T (508) 624-7786
F (508) 624-7716

Hazmat Promotion Specialist:
EHT Traceline Inc.
1121 Fifth Street NW
Washington, DC 2001
T (202) 393-1199
F (202) 393-1036

Environmental Consultant:
Watts Architecture & Engineering
95 Perry Street Suite
300 Buffalo, NY 14203
T (716) 206-5120
F (716) 472-4783

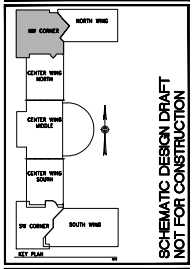

SCHEMATIC DESIGN DRAFT
NOT FOR CONSTRUCTION

Issue

CORNELL PDC PROJECT NUMBER C08070
SCHEMATIC DESIGN

Revisions

These Drawings are 30"x42" @ Millsize

Drawing Title

ROOF PART PLAN (6 OF 7)

KKA Project Number 0710.000	Approval
SGH Project Number 121068.02	
Drawn By FFB	
Checked By PSM	
Date JANUARY 2013	
Issue	

Drawing Number

R-107

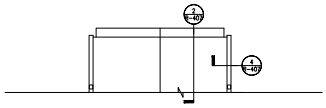

2 R-108 NORTH PORCH

NTS

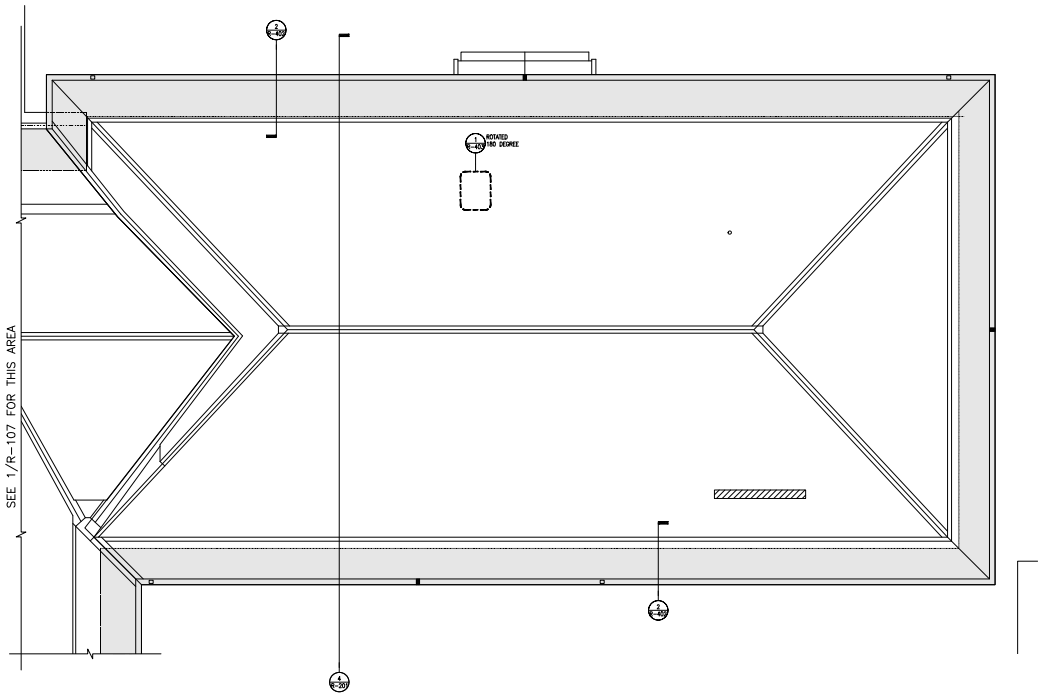

1 R-108 NORTH WING PARTIAL ROOF PLAN

1/4"=1'-0"

Project

GOLDWIN SMITH HALL ROOF REPLACEMENT

CORNELL UNIVERSITY
232 EAST AVENUE
ITHACA, NY

Architect

KOETTER | KIM & ASSOCIATES | INC.

ARCHITECTURE URBAN DESIGN

356 Boylston Street, Boston, MA 02116
T 617 536 8560 F 617 536 1217
W koetterkim.com

Consultants

Roof Covering and Roof Structure:
Simpson Gumpertz & Heger Associates Inc., P.C.
41 Seyon Street
Building 1, Suite 500
Waltham, MA 02451
T (781) 907-9000
F (781) 907-9009

Code Consultant:
Highest Fire Protection
5 Mount Royal Avenue
Suite 240
Marlborough, MA 01752
T (508) 624-7786
F (508) 624-7716

Hotel Promotion Specialist:
EHT Traversa Inc.
1121 Fifth Street NW
Washington, DC 20001
T (202) 393-1199
F (202) 393-1056

Environmental Consultant:
Watts Architecture & Engineering
95 Perry Street Suite
300 Buffalo, NY 14203
T (716) 206-5120
F (716) 412-4783

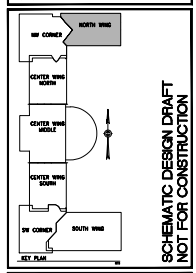

SCHEMATIC DESIGN DRAFT
NOT FOR CONSTRUCTION

Issue

CORNELL PDC PROJECT NUMBER C08070
SCHEMATIC DESIGN

Revisions

Trace Drawings are 30"x42" @ Millstrip

Drawing Title

ROOF PART PLAN (7 OF 7)

KKA Project Number 0710.000	Approval
SGH Project Number 121068.02	
Drawn By FFB	
Checked By PSM	
Date JANUARY 2013	
Issue	

Drawing Number

R-108

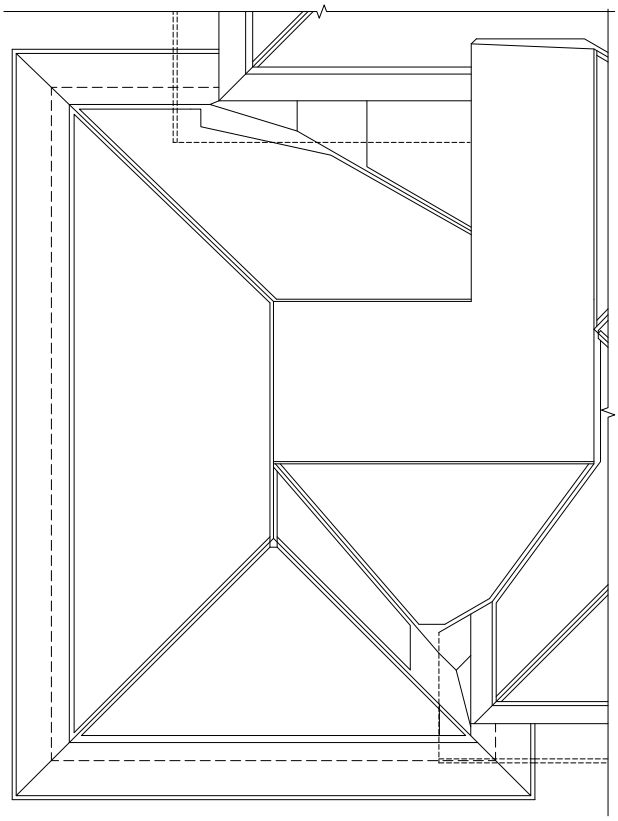

1 R-109 SOUTHWEST CORNER
EXISTING ROOF GEOMETRY
1/4"=1'

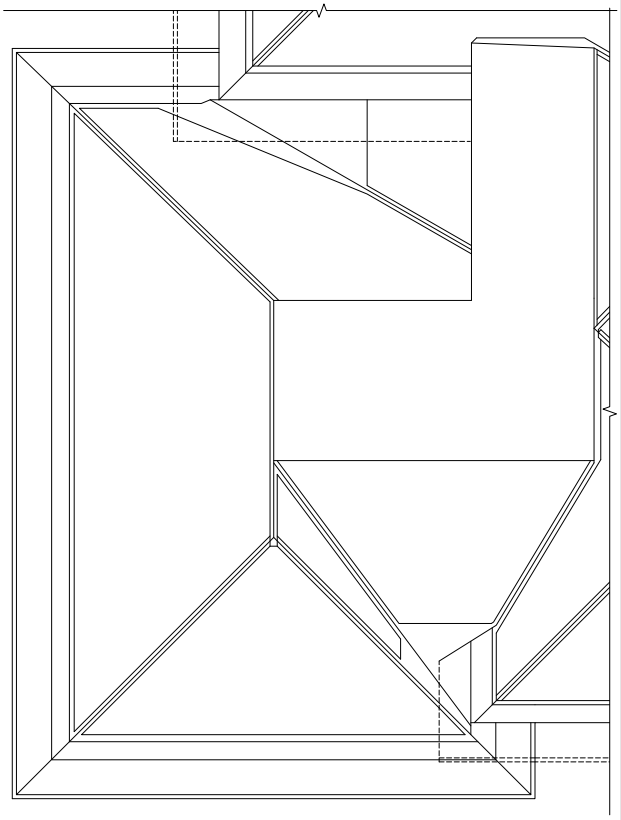

2 R-109 SOUTHWEST CORNER
PROPOSED ROOF GEOMETRY
1/4"=1'

Project

GOLDWIN SMITH HALL
ROOF REPLACEMENT

CORNELL UNIVERSITY
330 EAST AVENUE
ITHACA, NY

Architect
KOETTER | KIM & ASSOCIATES | INC.
ARCHITECTURE URBAN DESIGN
356 Boylston Street, Boston, MA 02116
T 617 536 3585 F 617 536 1217
W koetterkim.com

Consultants

Roof Covering and Roof Structure
Simpson Gumpertz & Heger Associates, Inc., P.C.
41 Seyon Street
Building 1, Suite 500
Waltham, MA 02451
T (781) 907-9000
F (781) 907-9009

Code Consultant
Higbee Fire Protection
5 Mount Royal Avenue
Suite 240
Marlborough, MA 01752
T (508) 624-7766
F (508) 624-7716

Historic Preservation Specialist
EHT Traceries Inc.
1121 Fifth Street NW
Washington, DC 2001
T (202) 393-1199
F (202) 393-1606

Environmental Consultant
Watts Architecture & Engineering
95 Perry Street Suite
300 Buffalo, NY 14203
T (716) 204-5100
F (716) 472-4763

SCHEMATIC DESIGN DRAFT
NOT FOR CONSTRUCTION

Issue
CORNELL PDC PROJECT NUMBER C08070
SCHEMATIC DESIGN

Revisions

These Drawings are 30"x42" @ 1/4"=1'

Drawing Title

SW CORNER
VALLEY ADJUSTMENT

KKA Project Number 0710.000	Approved
SGH Project Number 121068.02	
Drawn By KBM	
Checked By PSM	
Date JANUARY 2013	
Issue	

Drawing Number

R-109

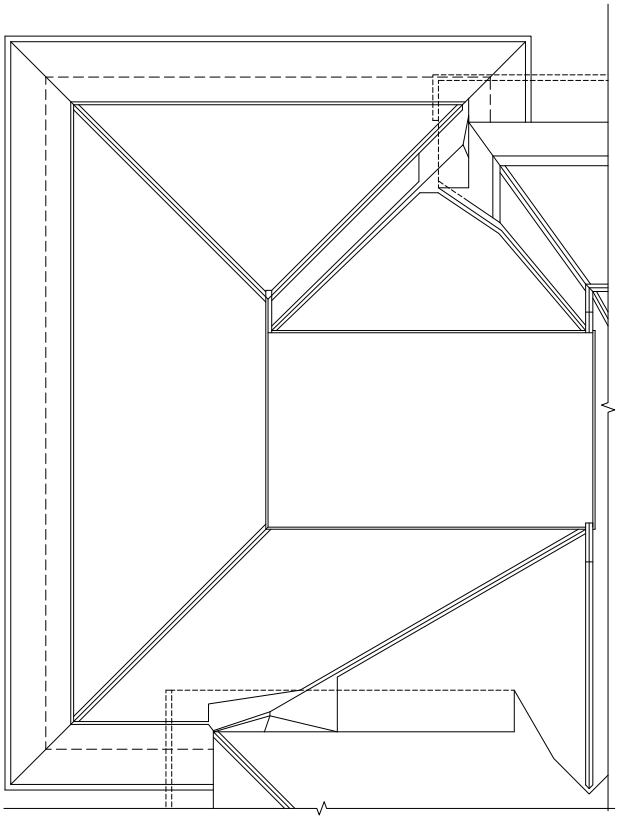

1 R-110 NORTHWEST CORNER
EXISTING ROOF GEOMETRY
1/4"=1'

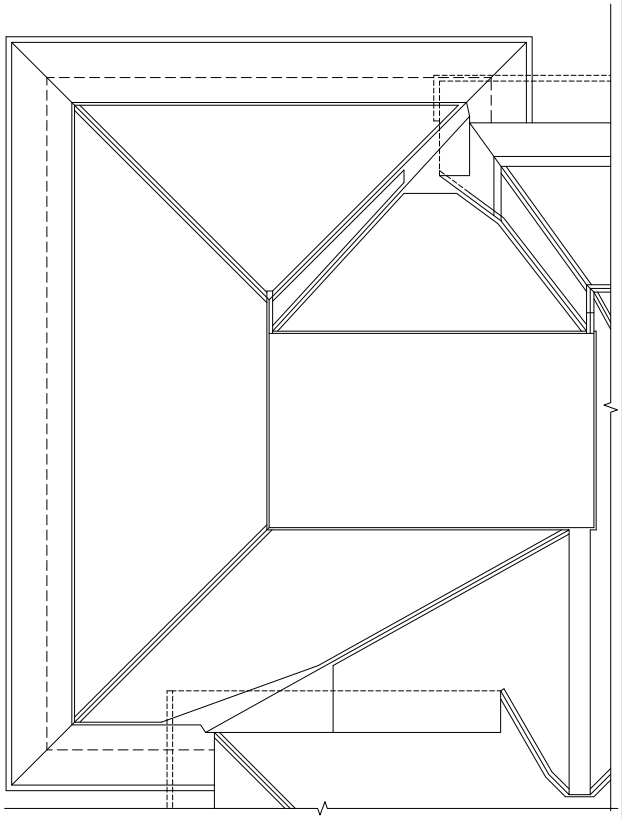

2 R-110 NORTHWEST CORNER
PROPOSED ROOF GEOMETRY
1/4"=1'

Project

GOLDWIN SMITH HALL
ROOF REPLACEMENT

CORNELL UNIVERSITY
330 EAST AVENUE
ITHACA, NY

Architect
KOETTER | KIM & ASSOCIATES | INC.
ARCHITECTURE URBAN DESIGN
350 Boylston Street, Boston, MA 02116
T 617 536 3585 F 617 536 1217
E koetterkim.com

Consultants

Roof Covering and Roof Structure
Simpson Gumpertz & Heger Associates, Inc., P.C.
41 Seyon Street
Building 1, Suite 500
Waltham, MA 02451
T (781) 907-9000
F (781) 907-9009

Code Consultant
Higbee Fire Protection
5 Mount Royal Avenue
Suite 240
Marlborough, MA 01752
T (508) 624-7766
F (508) 624-7716

Historic Preservation Specialist
EHT Traceries Inc.
1121 Fifth Street NW
Washington, DC 2001
T (202) 393-1199
F (202) 393-1606

Environmental Consultant
Watts Architecture & Engineering
95 Perry Street Suite
300 Buffalo, NY 14203
T (716) 204-5100
F (716) 472-4763

SCHEMATIC DESIGN DRAFT
NOT FOR CONSTRUCTION

Issue
CORNELL PDC PROJECT NUMBER C08070
SCHEMATIC DESIGN

Revisions

These Drawings are 30"x42" @ 1/4"=1'-0"

Drawing Title

NW CORNER
VALLEY ADJUSTMENT

KKA Project Number 0710.000	Approved
SGH Project Number 121068.02	
Drawn By KBM	
Checked By PSM	
Date JANUARY 2013	
Issue	

Drawing Number

R-110

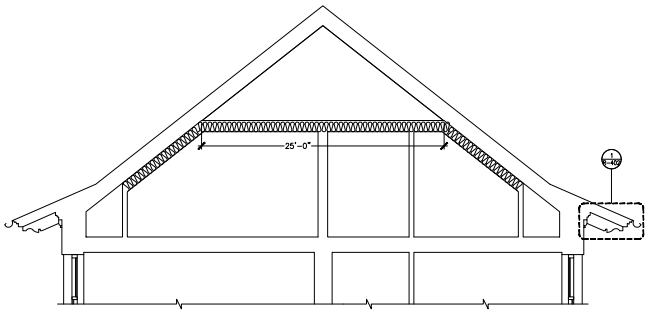

1 CENTER WING SECTION 1/4"=1'-0"

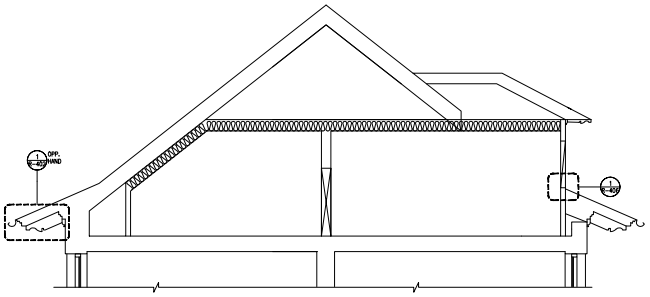

2 CENTER WING HIP DORMER SECTION 1/4"=1'-0"

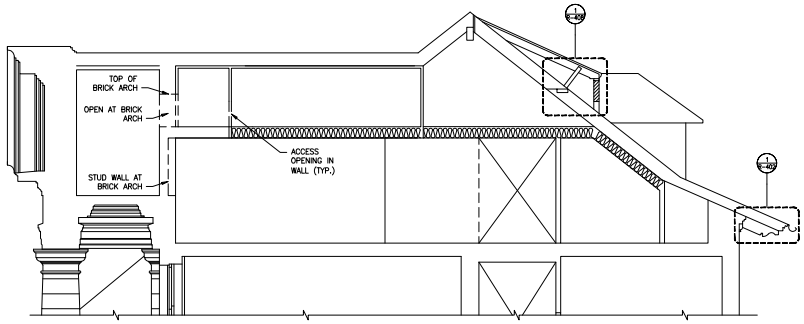

3 CENTER WING AT PORTICO SECTION 1/4"=1'-0"

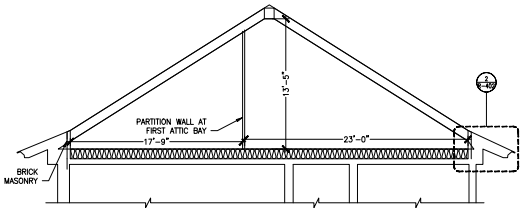

4 NORTH WING SECTION 1/4"=1'-0"

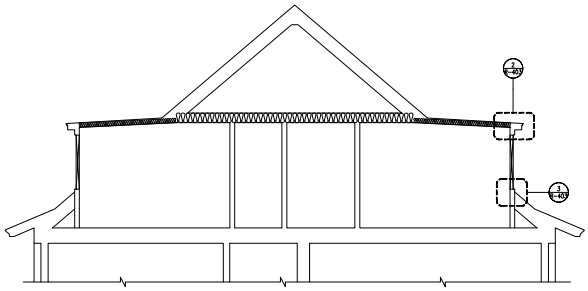

5 SOUTH WING SHED DORMER SECTION 1/4"=1'-0"

Project

GOLDWIN SMITH HALL ROOF REPLACEMENT

CORNELL UNIVERSITY
333 EAST AVENUE
ITHACA, NY

Architect

KOETTER | KIM & ASSOCIATES | INC.
ARCHITECTURE URBAN DESIGN
356 Boylston Street, Boston, MA 02116
T 617 536 0568 F 617 536 1217
E koetterkim.com

Consultants

Roof Covering and Roof Structure
Simpson Gumpertz & Heger Associates, Inc./P.C.
41 Seyon Street
Building 1, Suite 500
Waltham, MA 02451
T (781) 907-9000
F (781) 907-9009

Code Consultant
Higbee Fire Protection
5 Mount Royal Avenue
Suite 240
Marlborough, MA 01752
T (508) 624-7766
F (508) 624-7716

Historic Preservation Specialist
EHT Traceries Inc.
1121 Fifth Street NW
Washington, DC 2001
T (202) 393-1199
F (202) 393-1606

Environmental Consultant
Watts Architecture & Engineering
95 Perry Street Suite
300 Buffalo, NY 14203
T (716) 204-5100
F (716) 472-4763

SCHEMATIC DESIGN DRAFT NOT FOR CONSTRUCTION

Issue

CORNELL PDC PROJECT NUMBER C08070
SCHEMATIC DESIGN

Revisions

These Drawings are 30"x42" @ 1/4"=1'-0"

Drawing Title

SECTIONS AND DETAILS

KKA Project Number 0710.000	Approved
SGH Project Number 121068.02	
Drawn By FYB	
Checked By PSM	
Date JANUARY 2013	
Issue	

Drawing Number

R-201

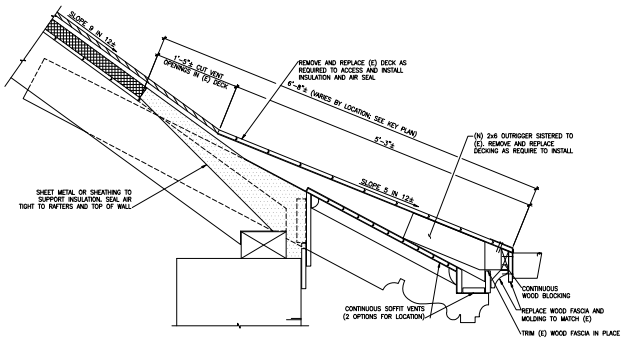

1 R-402 EAVE AT MAIN BUILDING SECTION — 1 1/2"=1'-0"

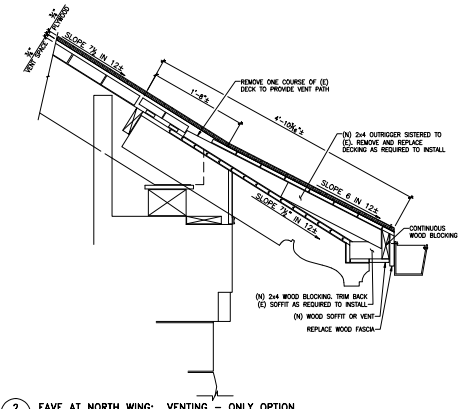

2 R-402 EAVE AT NORTH WING: VENTING – ONLY OPTION SECTION — 1 1/2"=1'-0"

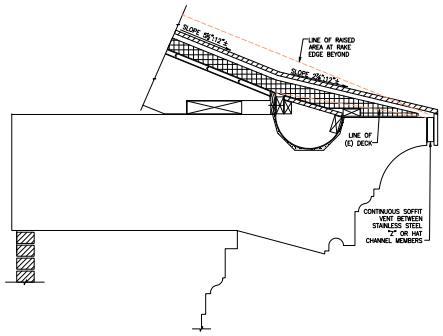

3 R-402 EAVE AT PORTICO: INSULATED SECTION — 1 1/2"=1'-0"

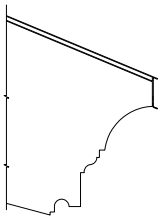

4 R-402 EAVE AT PORTICO GABLE END BUMP-UP SECTION — 1 1/2"=1'-0"

Project

GOLDWIN SMITH HALL ROOF REPLACEMENT

CORNELL UNIVERSITY
33 EAST AVENUE
ITHACA, NY

Architect
KOETTER | KIM & ASSOCIATES | INC.
ARCHITECTURE URBAN DESIGN
356 Boylston Street, Boston, MA 02116
T 617 536 0568 F 617 536 1217
e koetterkim.com

Consultants

Roof Covering and Roof Structure
Simpson Gumpertz & Heger Associates, Inc./P.C.
41 Seyon Street
Building 1, Suite 500
Waltham, MA 02451
T (781) 907-9000
F (781) 907-9009

Code Consultant
Higbee Fire Protection
5 Mount Royal Avenue
Suite 240
Marlborough, MA 01752
T (508) 624-7766
F (508) 624-7716

Historic Preservation Specialist
EHT Traceries Inc.
1121 Fifth Street NW
Washington, DC 20001
T (202) 393-1199
F (202) 393-1606

Environmental Consultant
Watts Architecture & Engineering
95 Perry Street Suite 300
Buffalo, NY 14203
T (716) 204-5100
F (716) 472-4763

SCHEMATIC DESIGN DRAFT NOT FOR CONSTRUCTION

Issue

CORNELL PDC PROJECT NUMBER C08070
SCHEMATIC DESIGN

Revisions

These Drawings are 30"x42" @ 1/8"=1'0

Drawing Title

EAVE DETAILS

KKA Project Number 0710.000	Approved
SGH Project Number 121068.02	
Drawn By **FYB**	
Checked By **PSM**	
Date JANUARY 2013	
Issue	

Drawing Number

R-402

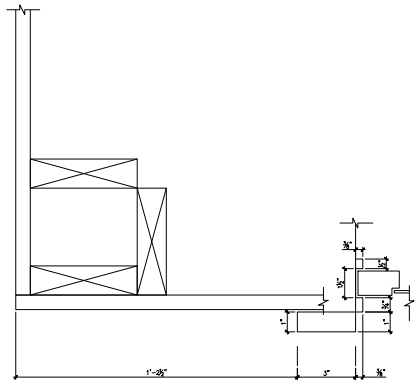

1 R-403 SOUTH WING SHED DORMER JAMB & CORNER PLAN 6"=1'-0"

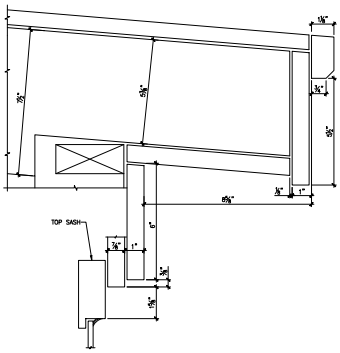

2 R-403 SOUTH WING SHED DORMER WINDOW HEAD SECTION 6"=1'-0"

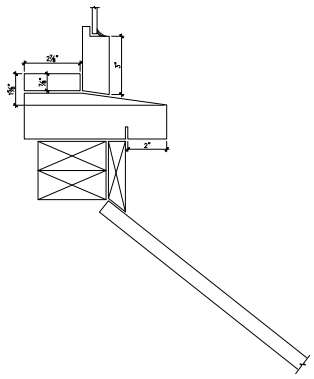

3 R-403 SOUTH WING SHED DORMER WINDOW SILL SECTION 6"=1'-0"

Project

GOLDWIN SMITH HALL ROOF REPLACEMENT

CORNELL UNIVERSITY
232 EAST AVENUE
ITHACA, NY

Architect

KOETTER | KIM & ASSOCIATES | INC.

ARCHITECTURE URBAN DESIGN

356 Boylston Street, Boston, MA 02116
T 617 536 8560 F 617 536 1217
W koetterkim.com

Consultants

Roof Covering and Roof Structure:
Simpson Gumpertz & Heger Associates Inc., P.C.
41 Seyon Street
Building 1, Suite 500
Waltham, MA 02451
T (781) 907-9000
F (781) 907-9009

Code Consultant:
Hughes Fire Protection
5 Mount Royal Avenue
Suite 240
Marlborough, MA 01752
T (508) 624-7786
F (508) 624-7718

Hoist Provision Specialist:
EHT Traceries Inc.
1121 Fifth Street NW
Washington, DC 20001
T (202) 393-1199
F (202) 393-1036

Environmental Consultant:
Watts Architecture & Engineering
95 Perry Street Suite
300 Buffalo, NY 14203
T (716) 206-5100
F (716) 472-4763

SCHEMATIC DESIGN DRAFT
NOT FOR CONSTRUCTION

Issue

CORNELL PDC PROJECT NUMBER C08070
SCHEMATIC DESIGN

Revisions

These Drawings are 30"x42" @ 1/8"=1'-0"

Drawing Title

SOUTH SHED DORMER DETAILS

KKA Project Number 0710.000	Approval
SGH Project Number 121068.02	
Drawn By **FFB**	
Checked By **PSM**	
Date JANUARY 2013	
Issue	

Drawing Number

R-403

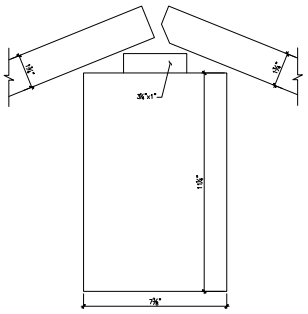

1 R-404 NORTH WING HIP
SECTION CUT PERPENDICULAR TO ROOF SLOPE 6"=1'-0"

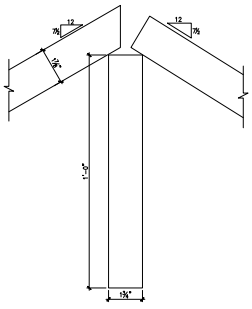

2 R-404 NORTH WING RIDGE
SECTION 6"=1'-0"

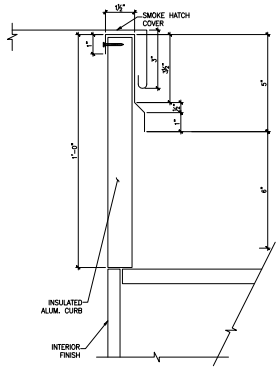

3 R-404 SOUTH WING – EAST SMOKE HATCH
SECTION 6"=1'-0"

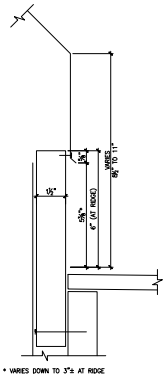

4 R-404 SW CORNER EXHAUST VENT
SECTION 6"=1'-0"

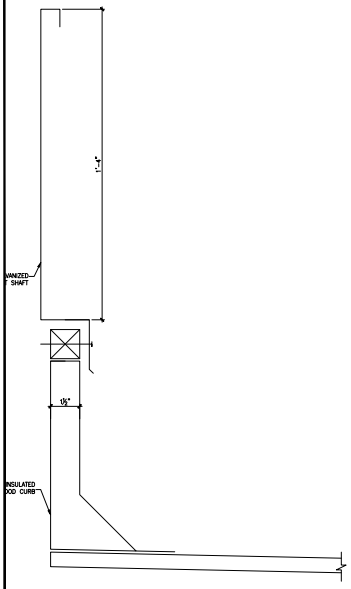

5 R-404 SW CORNER LARGE VENT
SECTION 6"=1'-0"

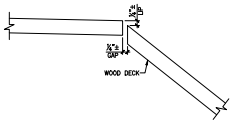

6 R-404 SW CORNER LOW-SLOPE ROOF EDGE
SECTION 6"=1'-0"

Project

GOLDWIN SMITH HALL ROOF REPLACEMENT

CORNELL UNIVERSITY
232 EAST AVENUE
ITHACA, NY

Architect

KOETTER | KIM & ASSOCIATES | INC.
ARCHITECTURE URBAN DESIGN
356 Boylston Street, Boston, MA 02116
T 617 536 8560 F 617 536 1217
W koetterkim.com

Consultants

Roof Covering and Roof Structure:
Simpson Gumpertz & Hegar Associates, Inc., P.C.
41 Boyon Street
Building 1, Suite 500
Waltham, MA 02451
T (781) 907-9000
F (781) 907-9009

Code Consultant:
Highest Fire Protection
5 Mount Royal Avenue
Suite 240
Marlborough, MA 01752
T (508) 624-7786
F (508) 624-7718

Hoist Preventer Specialist:
EHT Traceries Inc.
1121 Fifth Street NW
Washington, DC 2001
T (202) 393-1199
F (202) 393-1036

Environmental Consultant:
Watts Architecture & Engineering
95 Perry Street Suite
300 Buffalo, NY 14203
T (716) 206-3100
F (716) 412-4763

SCHEMATIC DESIGN DRAFT
NOT FOR CONSTRUCTION

Issue

CORNELL PDC PROJECT NUMBER C08070
SCHEMATIC DESIGN

Revisions

These Drawings are 30"x42" @ 1/8"=1'-0"

Drawing Title

MISC. ROOF DETAILS

KKA Project Number 0710.000	Approval
SGH Project Number 121068.02	
Drawn By **FFB**	
Checked By **PSM**	
Date JANUARY 2013	
Issue	

Drawing Number

R-404

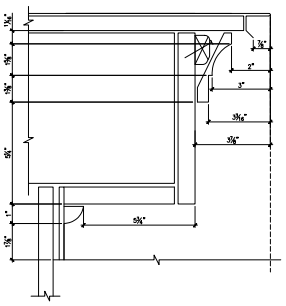

1 R-405 WEST DORMER ROOF EDGE SECTION 6"=1'-0"

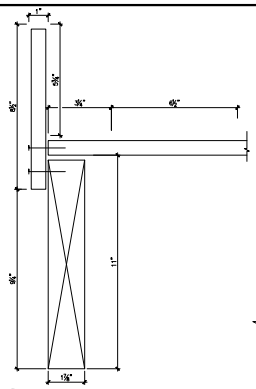

2 R-405 NW CORNER ROOF ACCESS HATCH SECTION 6"=1'-0"

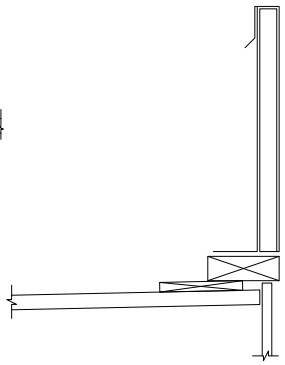

3 R-405 SW CORNER SMOKE HATCH SECTION 6"=1'-0"

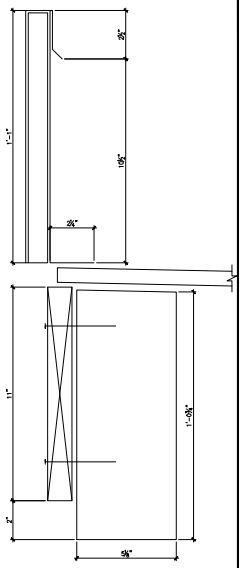

7 R-405 NW CORNER SMOKE HATCH SECTION 6"=1'-0"

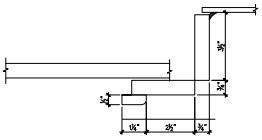

4 R-405 WEST DORMER WINDOW JAMB PLAN 6"=1'-0"

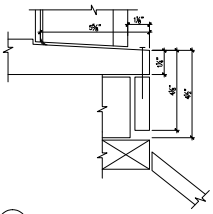

5 R-405 WEST DORMER WINDOW SILL SECTION 6"=1'-0"

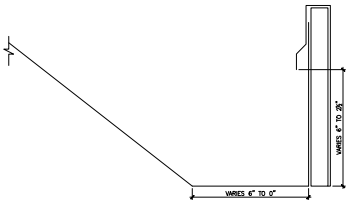

6 R-405 SOUTH WING SMOKE HATCH CRICKET SECTION 6"=1'-0"

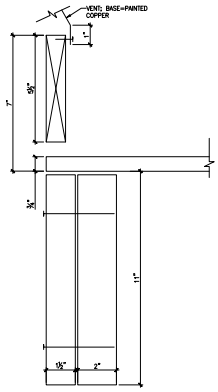

8 R-405 NW CORNER GRAVITY VENT SECTION 6"=1'-0"

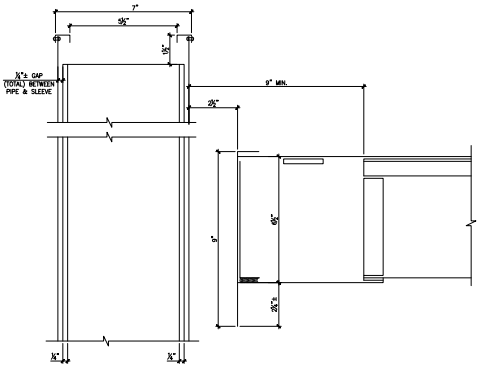

9 R-405 EMERGENCY GENERATOR EXHAUST PIPE SECTION 6"=1'-0"

Project

GOLDWIN SMITH HALL ROOF REPLACEMENT

CORNELL UNIVERSITY
330 EAST AVENUE
ITHACA, NY

Architect
KOETTER | KIM & ASSOCIATES | INC.
ARCHITECTURE URBAN DESIGN
356 Boylston Street, Boston, MA 02116
T 617 536 0585 F 617 536 1217
E koetterkim.com

Consultants

Roof Covering and Roof Structure
Simpson Gumpertz & Heger Associates, Inc./P.C.
41 Seyon Street
Building 1, Suite 500
Waltham, MA 02451
T (781) 907-9000
F (781) 907-9009

Code Consultant
Higbee Fire Protection
5 Mount Royal Avenue
Suite 240
Marlborough, MA 01752
T (508) 624-7766
F (508) 624-7716

Historic Preservation Specialist
EHT Traceries Inc.
1121 Fifth Street NW
Washington, DC 20001
T (202) 393-1199
F (202) 393-1606

Environmental Consultant
Watts Architecture & Engineering
95 Perry Street Suite
300 Buffalo, NY 14203
T (716) 204-5100
F (716) 472-4763

SCHEMATIC DESIGN DRAFT
NOT FOR CONSTRUCTION

Issue
CORNELL PDC PROJECT NUMBER C08070
SCHEMATIC DESIGN

Revisions

These Drawings are 30"x42" @ 1/8"=1'0"

Drawing Title
MISC. ROOF DETAILS

KKA Project Number 0710.000	Approved
SGH Project Number 121068.02	
Drawn By **FTB**	
Checked By **PSM**	
Date JANUARY 2013	
Issue	

Drawing Number
R-405

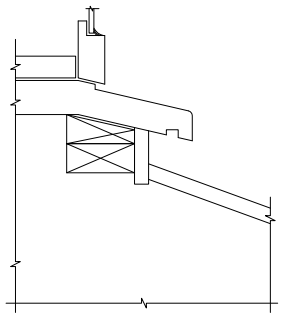

1 R-406 EAST DORMER WINDOW SILL SECTION 6"=1'-0"

Project

GOLDWIN SMITH HALL ROOF REPLACEMENT

CORNELL UNIVERSITY
232 EAST AVENUE
ITHACA, NY

Architect

KOETTER | KIM & ASSOCIATES | INC.

ARCHITECTURE URBAN DESIGN

356 Boylston Street, Boston, MA 02116
T 617 536 8560 F 617 536 1217
W koetterkim.com

Consultants

Roof Covering and Roof Structure:
Simpson Gumpertz & Heger Associates, Inc., P.C.
41 Seyon Street
Building 1, Suite 500
Waltham, MA 02451
T (781) 907-5000
F (781) 907-5009

Crane Consultant:
Highest Fire Protection
5 Mount Royal Avenue
Suite 240
Marlborough, MA 01752
T (508) 624-7766
F (508) 624-7716

Hotel Promotion Specialist:
EHT Traceries Inc.
1121 Fifth Street NW
Washington, DC 20001
T (202) 393-1199
F (202) 393-1036

Environmental Consultant:
Watts Architecture & Engineering
95 Perry Street Suite
300 Buffalo, NY 14203
T (716) 206-5100
F (716) 472-4763

SCHEMATIC DESIGN DRAFT
NOT FOR CONSTRUCTION

Issue

CORNELL PDC PROJECT NUMBER C08070
SCHEMATIC DESIGN

Revisions

These Drawings are 30"x42" @ 1/8"=1'-0"

Drawing Title

EAST HIP DORMER DETAILS

KKA Project Number 0710.000	Approval
SGH Project Number 121068.02	
Drawn By **FFB**	
Checked By **PSM**	
Date JANUARY 2013	
Issue	

Drawing Number

R-406

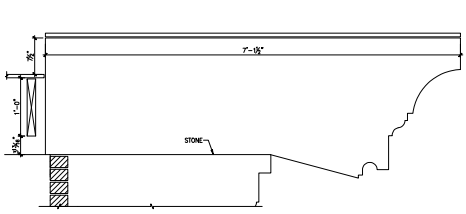

1 R-407 RAKE EDGE AT PORTICO SECTION 1 1/2"=1'-0"

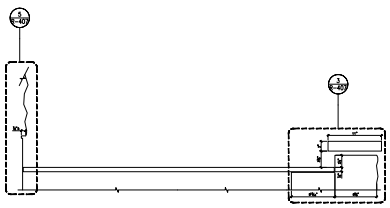

2 R-407 NORTH WING PORCH-RAKE EDGE AND RISING WALL SECTION 1 1/2"=1'-0"

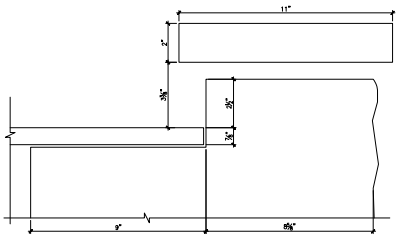

3 R-407 NORTH WING PORCH-RAKE EDGE SECTION 6"=1'-0"

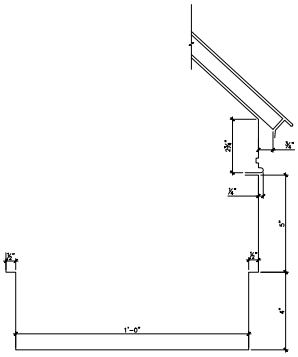

4 R-407 NORTH WING PORCH EAVE SECTION 6"=1'-0"

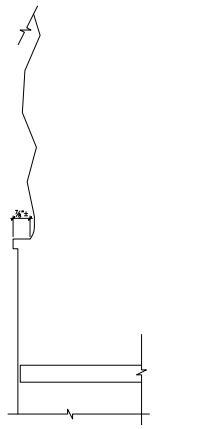

5 R-407 NORTH WING PORCH RISING WALL SECTION 6"=1'-0"

Project

GOLDWIN SMITH HALL ROOF REPLACEMENT

CORNELL UNIVERSITY
333 EAST AVENUE
ITHACA, NY

Architect
KOETTER | KIM & ASSOCIATES | INC.
ARCHITECTURE URBAN DESIGN
356 Boylston Street, Boston, MA 02116
T 617 536 3585 F 617 536 1217
E koetterkim.com

Consultants

Roof Covering and Roof Structure
Simpson Gumpertz & Heger Associates, Inc., P.C.
41 Seyon Street
Building 1, Suite 500
Waltham, MA 02451
T (781) 907-9000
F (781) 907-9009

Code Consultant
Higbee Fire Protection
5 Mount Royal Avenue
Suite 240
Marlborough, MA 01752
T (508) 624-7766
F (508) 624-7716

Historic Preservation Specialist
EHT Traceries Inc.
1121 Fifth Street NW
Washington, DC 20001
T (202) 393-1199
F (202) 393-1606

Environmental Consultant
Watts Architecture & Engineering
95 Perry Street Suite 300
Buffalo, NY 14203
T (716) 204-5100
F (716) 472-4763

SCHEMATIC DESIGN DRAFT
NOT FOR CONSTRUCTION

Issue
CORNELL PDC PROJECT NUMBER C08070
SCHEMATIC DESIGN

Revisions

These Drawings are 30"x42" @ 1/8"=1'0

Drawing Title

MISC. ROOF DETAILS

KKA Project Number 0710.000	Approval
SGH Project Number 121068.02	
Drawn By **FTB**	
Checked By **PSM**	
Date JANUARY 2013	
Issue	

Drawing Number

R-407

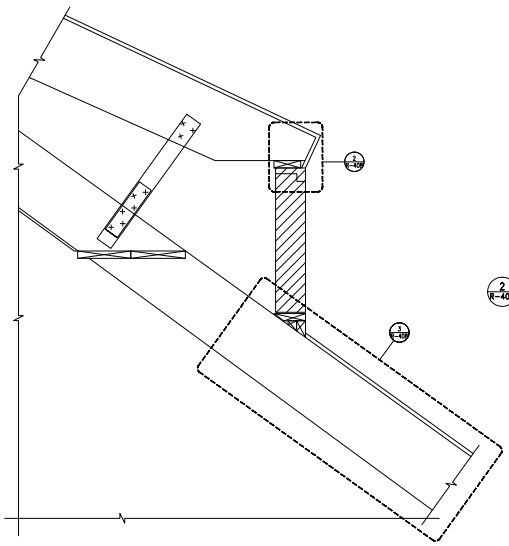

1 R-408 SHED DORMER AT LOUVER SECTION 1 1/2"=1'-0"

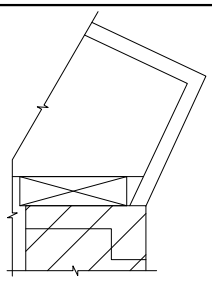

2 R-408 SHED DORMER AT LOUVER DETAIL SECTION 6"=1'-0"

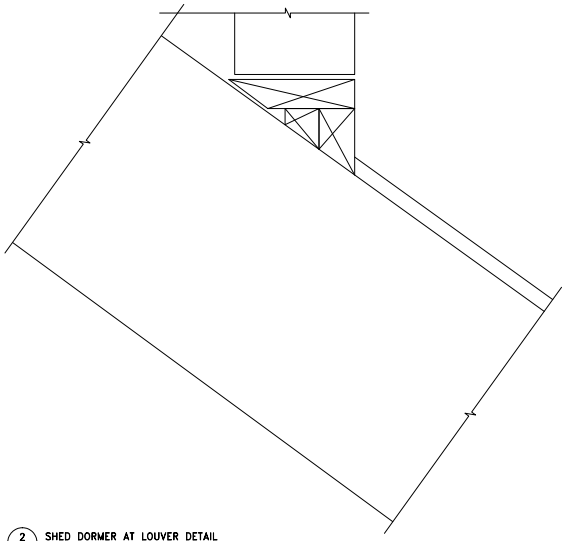

2 R-408 SHED DORMER AT LOUVER DETAIL SECTION 6"=1'-0"

Project

GOLDWIN SMITH HALL
ROOF REPLACEMENT

CORNELL UNIVERSITY
333 EAST AVENUE
ITHACA, NY

Architect
KOETTER | KIM & ASSOCIATES | INC.
ARCHITECTURE URBAN DESIGN
350 Boylston Street, Boston, MA 02116
T 617 536 8585 F 617 536 1217
koetterkim.com

Consultants

Roof Covering and Roof Structure
Simpson Gumpertz & Heger Associates, Inc., P.C.
41 Seyon Street
Building 1, Suite 500
Waltham, MA 02451
T (781) 907-9000
F (781) 907-9009

Code Consultant
Hughes Fire Protection
5 Mount Royal Avenue
Suite 240
Marlborough, MA 01752
T (508) 624-7766
F (508) 624-7716

Historic Preservation Specialist
EHT Traceries Inc.
1121 Fifth Street NW
Washington, DC 2001
T (202) 393-1199
F (202) 393-1606

Environmental Consultant
Watts Architecture & Engineering
95 Perry Street Suite
300 Buffalo, NY 14203
T (716) 204-5100
F (716) 472-4763

SCHEMATIC DESIGN DRAFT
NOT FOR CONSTRUCTION

Issue
CORNELL PDC PROJECT NUMBER C08070
SCHEMATIC DESIGN

Revisions

These Drawings are 30"x42" @ 1/8in/in

Drawing Title

SHED DORMER AT LOUVER DETAILS

KKA Project Number 0710.000	Approved
SGH Project Number 121068.02	
Drawn By FYB	
Checked By PSM	
Date JANUARY 2013	
Issue	

Drawing Number

R-408